5-① Verification tests of tritium separation technologies

Project objectives

Concerning the contaminated water to be generated at the Fukushima Daiichi NPS, efforts are being made to remove the 62 kinds of nuclides, but tritium remains because it cannot be isolated. Therefore, verification tests on the technologies of isolating tritium were conducted. More specifically, to verify the performance of separation in the water with the tritium generated within the power station (6.3×10^6 Bq/L to 4.2×10^6 Bq/L (the concentration depends on the timing of sampling)), an arbitrary-scale facility was built and verification tests were conducted to assess the performance of separation, the construction cost and the running cost.

Project details and progress

An arbitrary-scale facility was built, and assessment of the performance of separation and costs, etc. in the actual plant was conducted as Category A (three projects), and assessment of the performance of separation and costs in the laboratory-level tests was conducted as Category B (four projects). In both cases, a variety of issues were found, and it was not possible to find technologies of separation that can be put into practical use immediately.

(1) Category A

① Kurion Inc.: Water and hydrogen isotope exchange method (Combined Electrolysis Catalytic Exchange (CECE) method)) (**Fig.1**)

- Based on the experimental data obtained from small tests and the building of a 1/10 scale (engineering scale) facility, the performance of separation in the actual plant was verified and the cost was estimated, etc.
- In a design assuming a processing capacity of 400 m^3/day and an separation factor of 284 (H-3 concentration in the effluent: 4.4 Bq/cc), it was estimated that the facility scale was 10,200 m^2, the capital cost was $891,400,000, and the operating cost was $1,157,500,000 (per 800,000 m^2 processing; the same applies hereinafter).
- The following issues were pointed out: there were variations, including instability and reproducibility in the test data; further data must be acquired to assess the performance; the assumed performance level in the design of actual plant is not obtained in the test plant; and the cost estimate related to the construction and demolition of the actual plant is thought to be underestimated.

Fig. 1: Kurion's test equipment

② RosRAO: Combination of the water distillation method and the CECE method (**Fig.2**)

- Based on experimental data, etc. obtained from the construction of the actual-scale facility, the performance of separation in the actual plant was verified and the cost was estimated, etc.
- In a design assuming a processing capacity of 480 m^3/day and an separation factor of 500, the construction cost was ¥38,500,000,000, and the operating cost was ¥40,500,000,000.
- The following issues were pointed out: there is a need to clarify evidence data for the performance of separation, etc.; detailed investigation of mass balance including the amount of waste material on the concentration side is required; testing is required for long-term operation and process stability; and the cost estimation is considered to be underestimated.


Fig. 2: RosRAO's test equipment

③ Sasakura Engineering: Low-temperature vacuum distillation method with catalyst function (**Fig.3**)

- Based on experimental data obtained from the construction of an engineering-scale facility, the performance of separation in the actual plant was verified and the cost was estimated etc.
- In a design assuming a processing capacity of 400 m^3/day and an separation factor of 100, it was estimated that the facility scale was 15,000 m^2, the construction cost was ¥37,100,000,000, and the operating cost was ¥21,200,000,000.
- While it is recognized that the graduation pre-processing test data was properly indicated, issues including the following were pointed out: the test scale was small, an assessment in a one-stage larger test plant is required to upgrade the scale to that of the actual plant, and cost estimation needs to be carefully investigated in a larger-scale test.

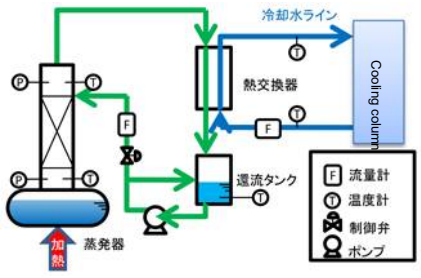

Fig. 3: Sasakura's test equipment

(2) Category B

① Sou Innovation: Two-stage gas hydride method (**Fig.4**)

- A laboratory-scale test was conducted for a tritium separation method in solid-liquid separation through the separation of gas hydride crystals that contain only the water with tritium in its structure.
- As a result of examination with laboratory-scale test equipment of a reaction vessel of 500 ml, with tritium from the tritium-containing water in the first-stage separation processing reduction, a reduction in the tritium concentration was achieved with a maximum separation factor of 341. On the other hand, of the tritium separation processing in the two-stage gas hydride, there are still issues concerning the performance of second-stage separation processing, such as that it would theoretically have been difficult to prove the performance in this minimum-scale test equipment.

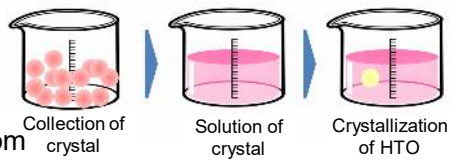

Fig. 4: Gas hydride method

② Toshiba Corporation: Multiple-stage crystallization method (**Fig.5**)

- A laboratory-scale test was conducted for a method of incorporating tritium into ice based on the different freezing points of water and the water with tritium and removing the ice with the increased tritium concentration.
- As a result of the test using the tritium liquid, there is a possibility of obtaining 1.02 of tritium separation ratio per one-stage processing by setting the proper ice residence time. It was pointed out, however, that the performance of separation was low, and it cannot be said that this is an advantageous approach compared to existing methods, such as the water distillation and CECE methods.

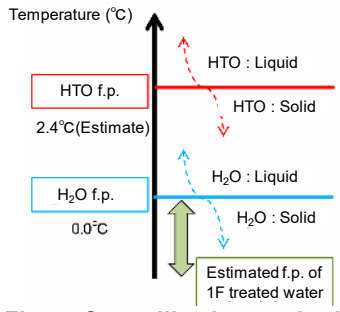

Fig. 5: Crystallization method

③ Nextide: Multiple electrolytic cell-type electrolytic method (**Fig.6**)

- A laboratory-scale test was carried out for a method of separation based on the differences in the carriage of hydrogen ions during electrolysis due to the different molecule sizes of the normal water that forms a cluster and the water with tritium that is thought to exist alone.
- An electrolysis test was conducted by simple cell with the water with tritium, and the separation factor of 1.015 was obtained. It was pointed out, however, that the uncertainty of data was high and that it is not clear whether tritium was selectively concentrated or depleted.

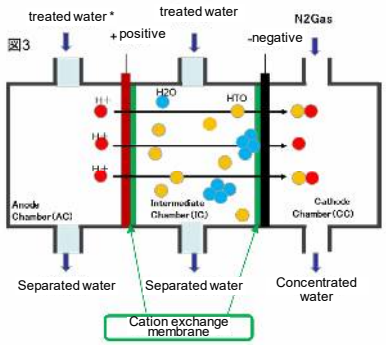

Fig. 6: Electrolytic method

④ Hokkaido University: Electrolysis recombination method with fuel batteries (**Fig.7**)

- A laboratory-scale test was conducted for the separation method based on the differences arising in the speed of the electrolysis reaction of ion-to-gas due to the mass number difference between light hydrogen and tritium.
- While it has been recognized as acquiring beneficial experimental data for the concentration of tritium in the fuel battery cell, issues including the following were pointed out: this experiment was carried out with heavy water whose concentration is higher than the tritium concentration in the water to be processed, and the applicability to isotope separation in a lower concentration region, such as the water with tritium in the Fukushima Daiichi NPS, has not been confirmed.

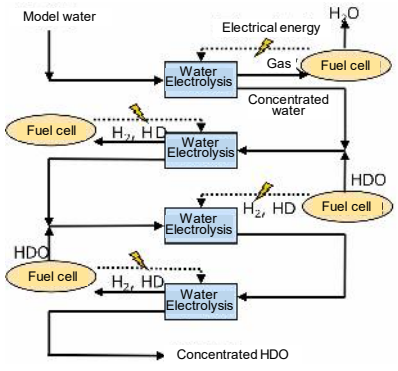

Fig. 7: Electrolysis recombination method with fuel batteries

Implemented by Kurion, Inc., RosRAO, FSUE, Sasakura Engineering, Hokkaido University, Nextide Inc., Toshiba Corporation and Sou Innovation

FY2011	FY2012	FY2013	FY2014	FY2015	FY2016
			Verification tests of tritium separation technologies		